SPECIFICATION

: 789
Address: No. 789, Kang Fu Road Tongzhou District Nantong city Jiangsu province
Tel: 0086-0513-68856666
Fax: 0086-0513-68383688

Specification for LED Thick Film Chip Resistors Type *CR*

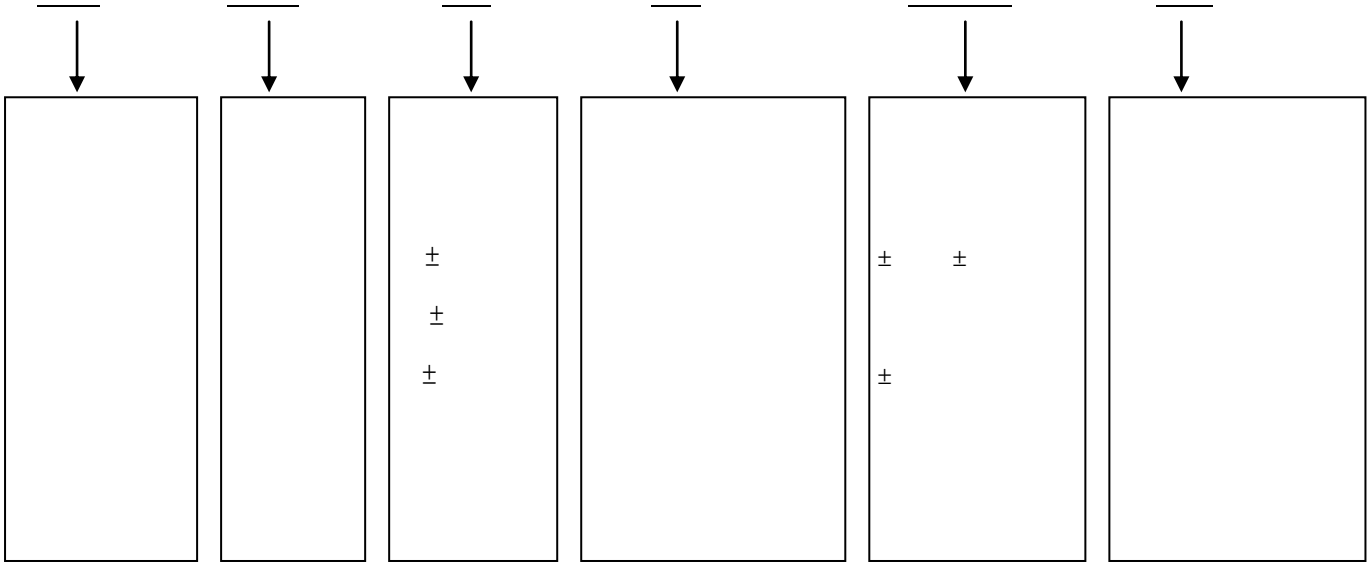

Specification for LED Thick Film Chip Resistors　Type *CR*

文件編號：

丽智电子
LIZ Electronic

Specification for LED Thick Film Chip Resistors Type *CR*

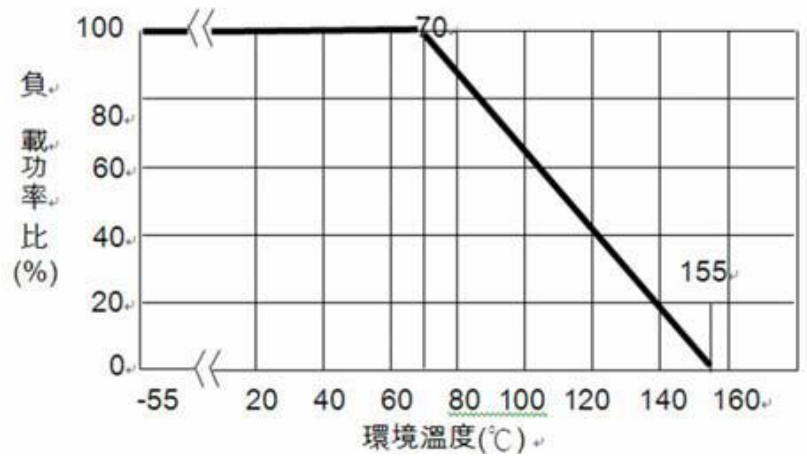

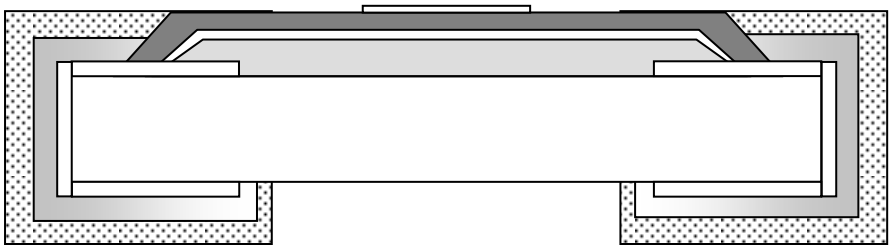

Outer Protective layer

Inner protective

Resistive layer

文件編號： 版本

Specification for LED Thick Film Chip Resistors Type *CR*

$\sqrt{RP}$

		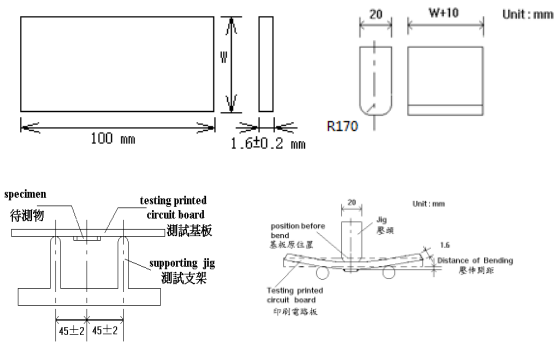 W 100 mm 1.6±0.2 mm 20 W+10 Unit : mm R170 specimen 待測物 testing printed circuit board 測試基板 supporting jig 測試支架 45±2 45±2 20 Unit : mm Jig 壓頭 position before bend 基板原位置 1.6 Distance of Bending 壓彎間距 Testing printed circuit board 印刷電路板	

丽智电子
LIZ Electronic

Specification for LED Thick Film Chip Resistors Type *CR*

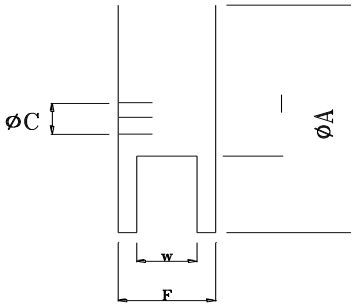

文件編號：　　版本

Specification for LED Thick Film Chip Resistors Type *CR*

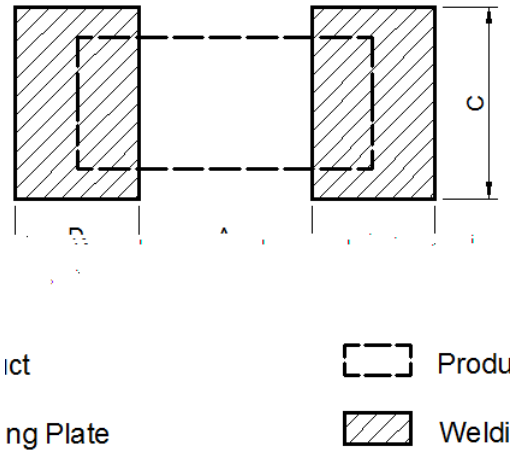

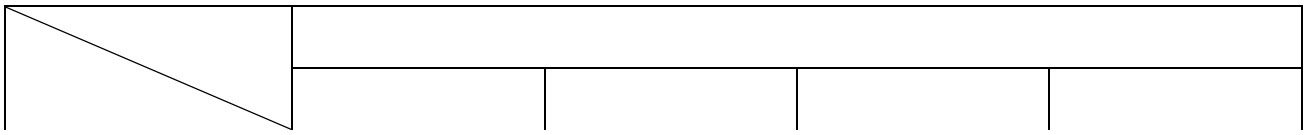

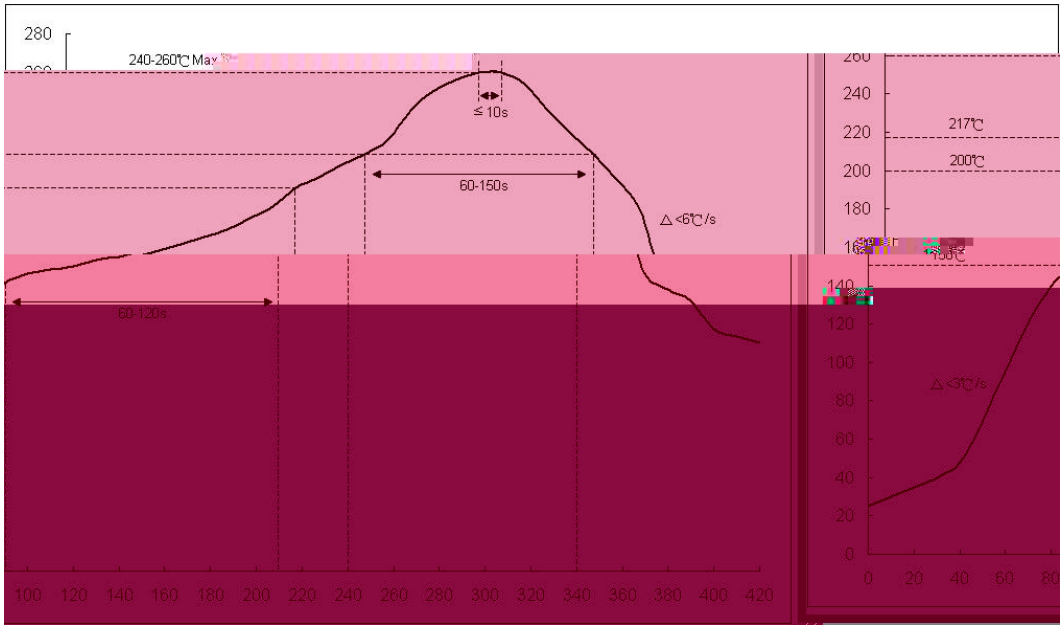

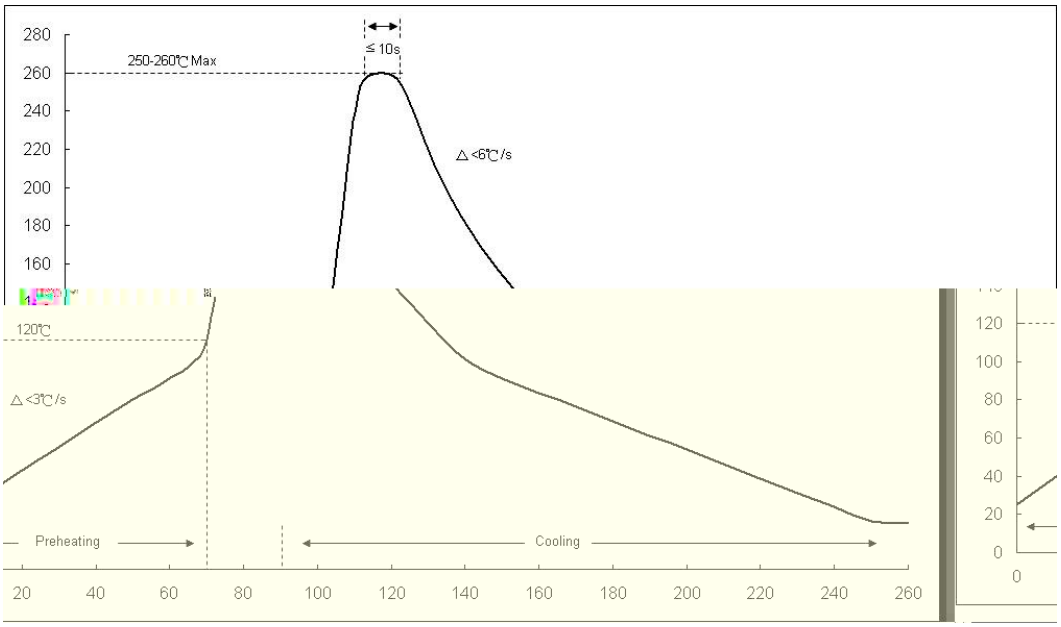

产品规格及资料如有更改，恕不另行通知。